Formulate
20’ Designer Series 05

Formulate 20ft Designer Series 05

Files @ 50% of actual size

GRAPHIC CODE

FMLT-DS-20-05-G
Backwall graphic
Total graphic area: 242”w X 102”h
Total visual area: 232”w X 92”h
Accent graphics
Total graphic area: 59.118”w X 104.315”h
Total visual area: 55.118”w X 100.315”h

Please be sure to include the 5” bleed around the perimeter of the backwall and 2” bleed around the perimeter of the accent panel to compensate for the finishing of the graphics. Do not design any critical elements (text, logos, etc.) within 2” of the edge (see dotted lines).

Please keep all obstructions into consideration when designing your graphics.

General Artwork Guidelines
- cmyk color mode
- do not embed images, supply them
- resolution must be 100-120 ppi
- all fonts must be created to outlines

This template was created on: 12.31.2015
This template was modified on: 12.31.2015

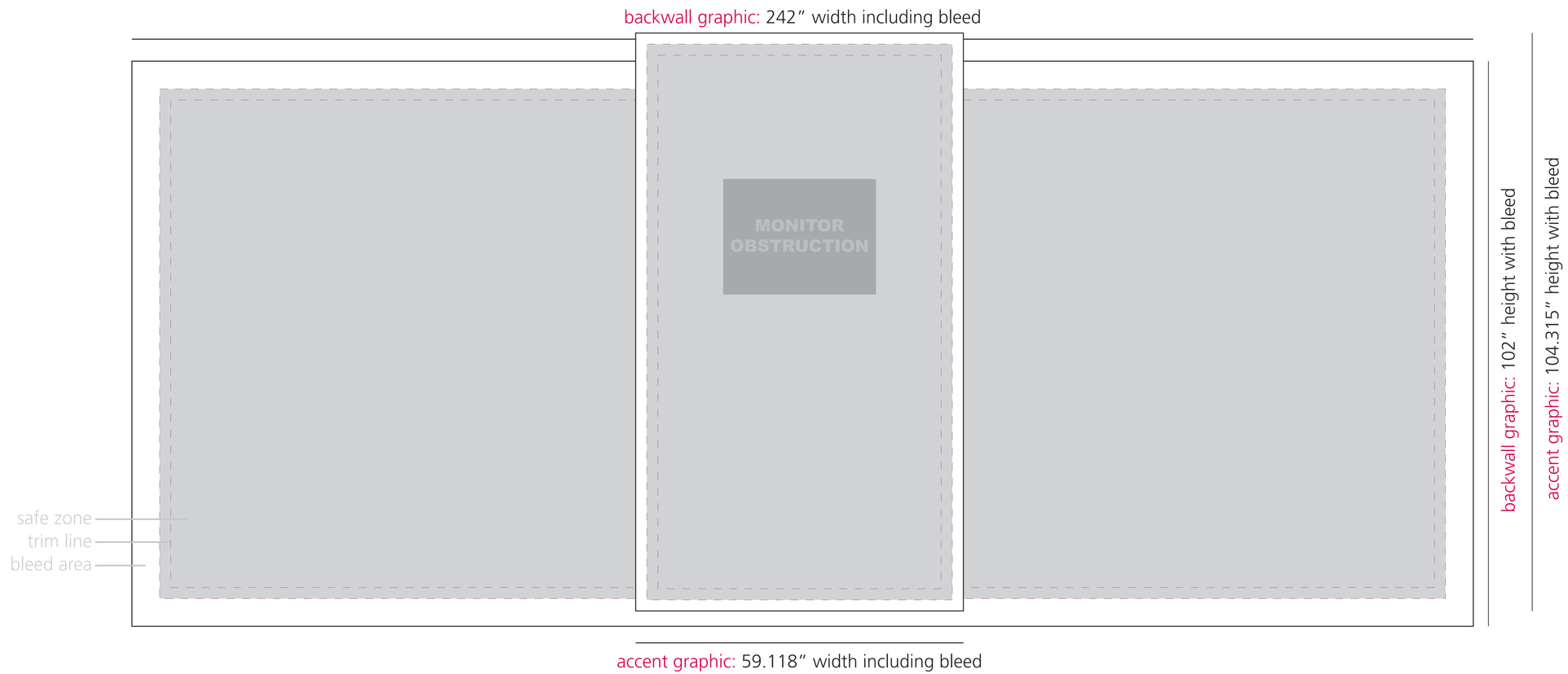
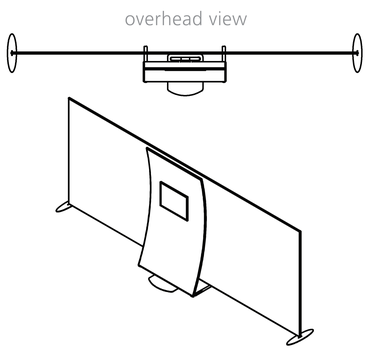
overhead view